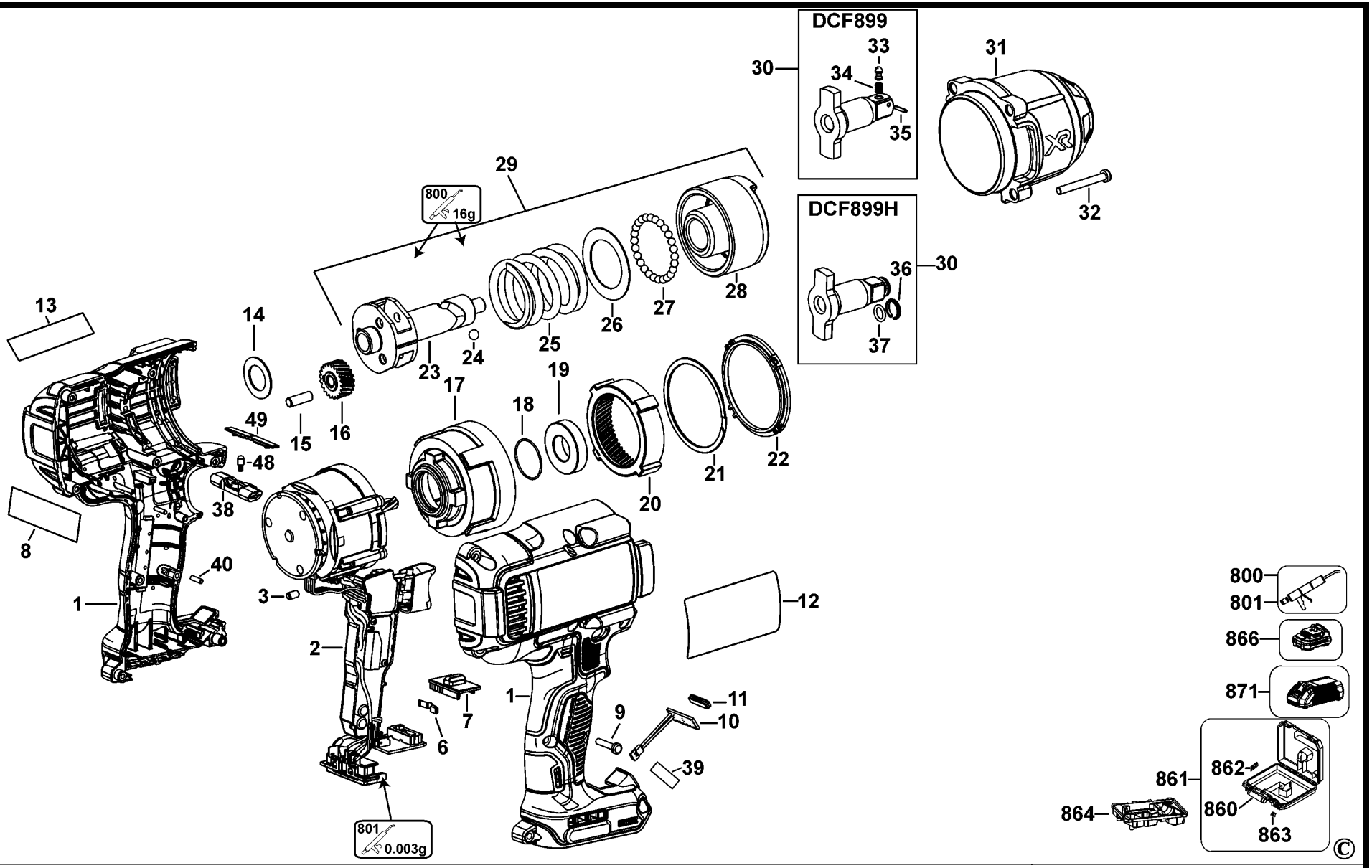
DCF899
DCF899H
800
16g
801
0.003g
1
2
3
6
7
8
9
10
11
12
13
14
15
16
17
18
19
20
21
22
23
24
25
26
27
28
29
30
31
32
33
34
35
36
37
38
39
40
48
49
800
801
866
871
861
862
860
863
864

DEWALT

DCF899

TYP. 4

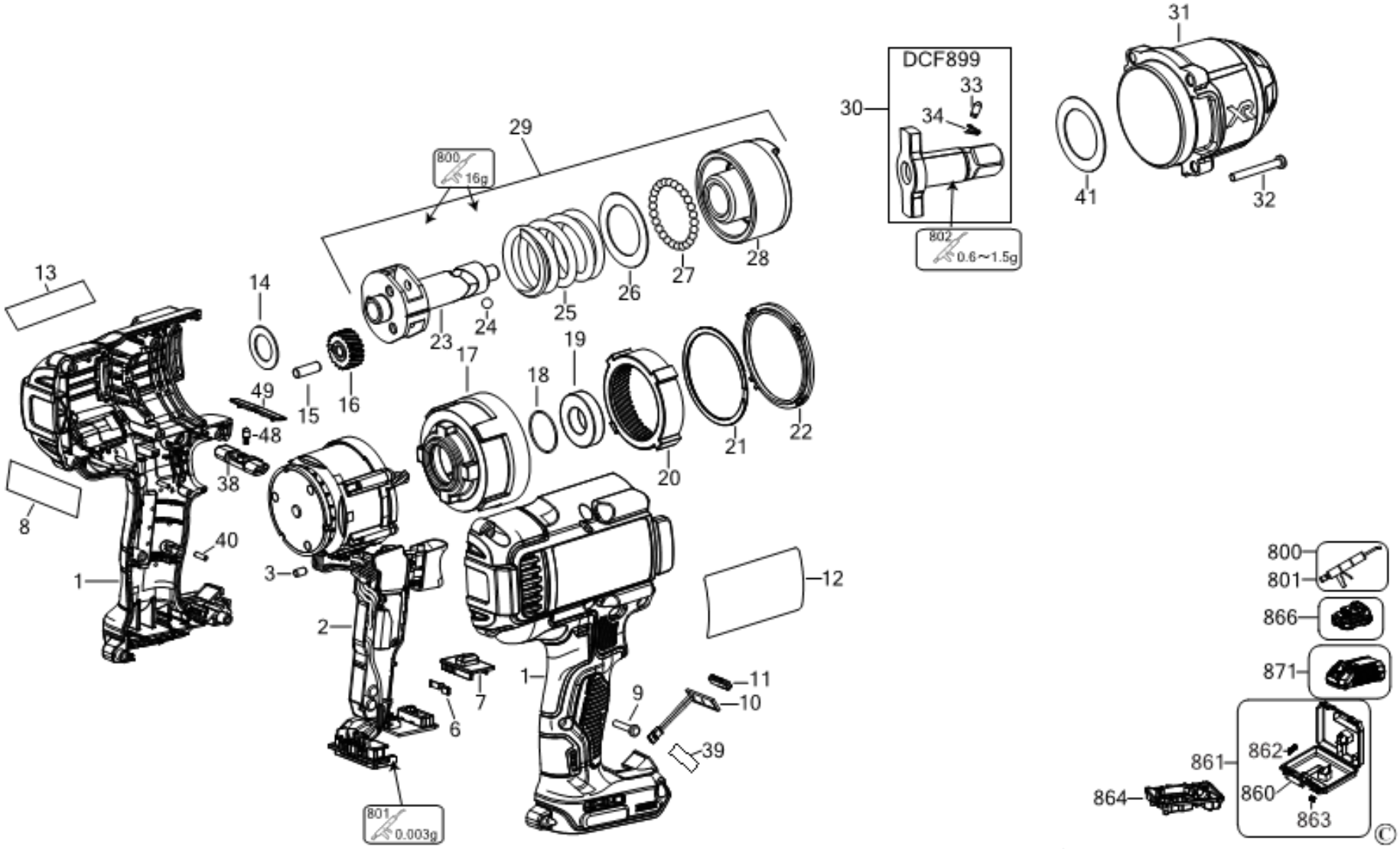

Parts List DCF899P2 CORDLESS IMPACT WRENCH 4

Item	Part Number	Qty	Part Description	General Description	Other Info	Repair Inst	Markets
1	N371919	1	CLAMSHELL SET			No	QW
2	N578553	1	MOTOR & SWITCH SA			No	QW
3	N186764	4	RUBBER PAD			No	QW
6	N392855	1	DETENT			No	QW
7	N393603	1	SELECTOR			No	QW
8	N404526	1	LABEL	BRUSHLESS		No	QW
9	90611830	9	SCREW			No	QW
10	N231799	1	LED LIGHT			No	QW
11	N394333	1	LENS			No	QW
12	NA099569	1	RATING PLATE	EURO	euro detent	No	QW
13	N237999	1	LABEL	18V		No	QW
14	N114027	1	WASHER			No	QW
15	N194994	3	PIN			No	QW
16	N389396	3	GEAR			No	QW
17	N363283	1	GEARCASE			No	QW
18	N411414	1	O RING			No	QW
19	N158641	1	BEARING			No	QW
20	N470304	1	GEAR	RING GEAR		No	QW
21	N389400	1	RING			No	QW
22	N410641	1	SEAL			No	QW
23	N591881	1	CARRIER SA			No	QW
24	618844-00	2	BALL STEEL			No	QW
25	N377938	1	SPRING			No	QW
26	N377515	1	WASHER THRUST			No	QW
27	000475-00	27	BALL STEEL			No	QW
28	N377373	1	IMPACTOR			No	QW
29	NA109167	1	IMPACTOR			No	QW
30	N816252	1	ANVIL ASSEMBLY		DCF899	No	QW
31	N816251	1	NOSE SA			No	QW
32	330019-16	4	SCREW			No	QW
32	NA002385	1	SCREW			No	QW
33	N587510	1	DETENT			No	QW

Parts List DCF899P2 CORDLESS IMPACT WRENCH 4

Item	Part Number	Qty	Part Description	General Description	Other Info	Repair Inst	Markets
34	N481048	1	SPRING			No	QW
38	N137055	1	ACTUATOR FWD/REV			No	QW
39	N408083	1	LABEL			No	QW
40	N071836	1	ROLL PIN			No	QW
41	N464079	1	WASHER			No	QW
48	326467-00	1	DETENT			No	QW
49	N419514	1	DETENT	FWD/REV		No	QW
800	N017298	1	GREASE	G-2008 Molykote	0.016g	No	QW
801	NA218891	1	GREASE	NYE NYOGEL 760G (150		No	QW
802	NA360289	1	GREASE	50G		No	QW
860	H1400196008	2	HANDLE			No	QW
861	N279261	1	KITBOX			No	QW
862	N409477	2	LATCH			No	QW
863	P910190	2	LATCH			No	QW
864	N414769	1	INSERT			No	QW
866	N394624	2	BATTERY 18V - 5.0AH - 90WH		P2	No	QW
871	NA132878	1	CHARGER	DCB1104-QW		No	QW